VRSE
VIRTUAL REALITY SPACE EXPERIENCE
Team Check-In and Milestone Timeline
2/19/2021

Where We Are:

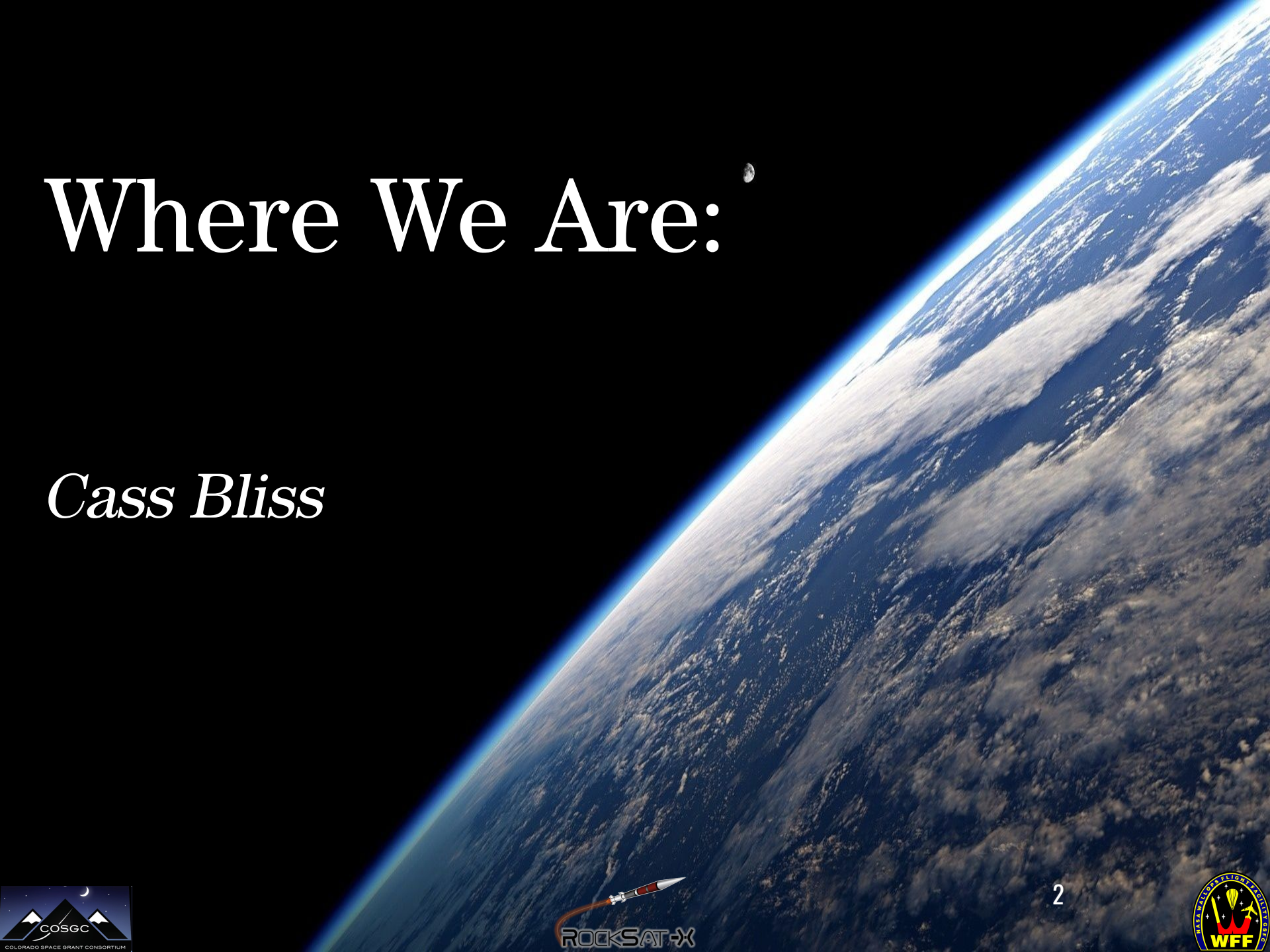

Cass Bliss

Where We Are:

- *Mechanical Updates (CAD, Inventory, ordering)*
- *Electrical Updates (Current pinout, prototype wiring/testing)*
- *Software Updates*
- *Schedule, Concerns, Questions*

Mechanical Updates

Cassidy Bliss
Anton Vandenberge

Where we are:

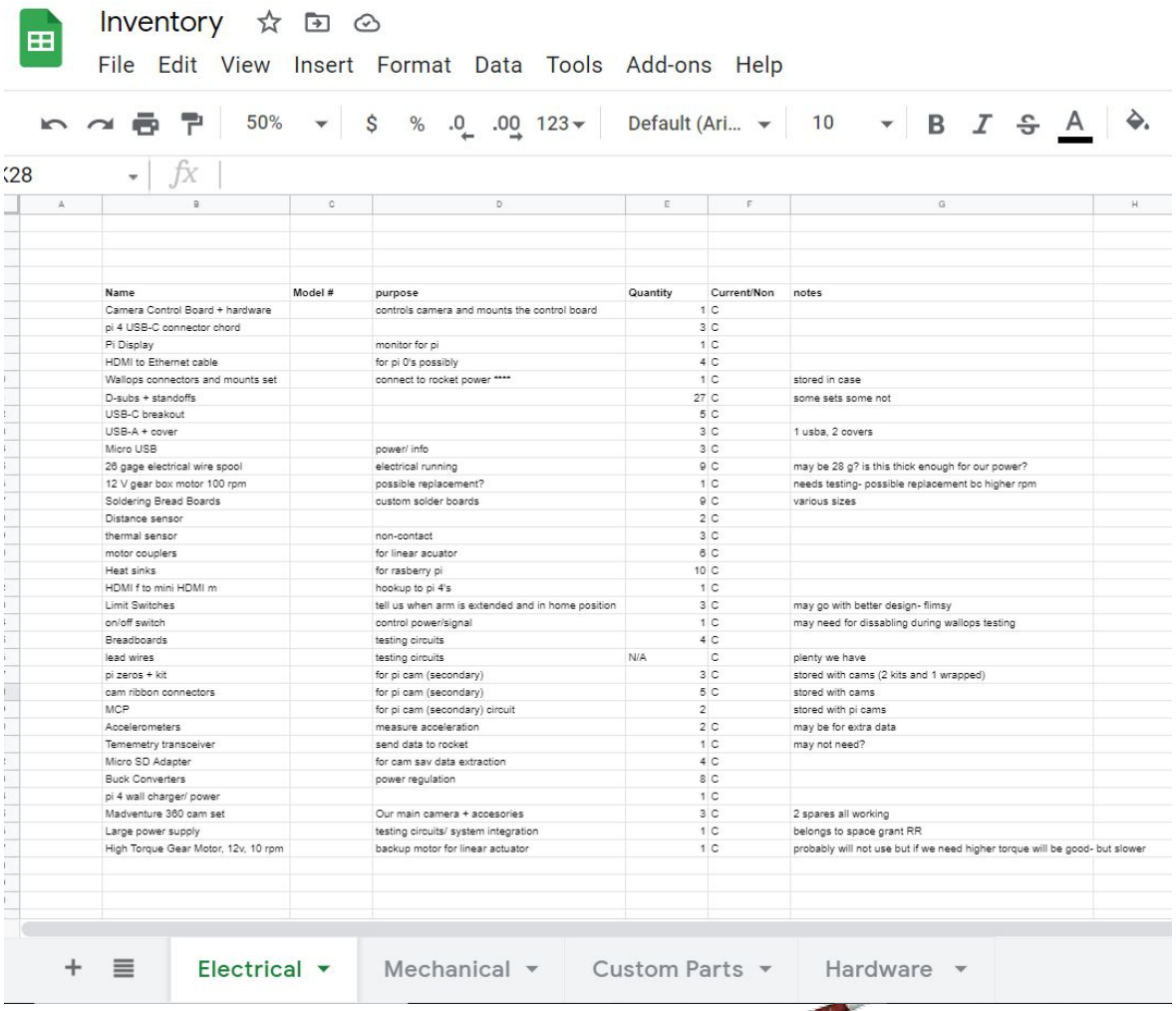

Inventory

File Edit View Insert Format Data Tools Add-ons Help

Name	Model #	purpose	Quantity	Current/Non	notes
Camera Control Board + hardware		controls camera and mounts the control board	1	C	
pi 4 USB-C connector chord			3	C	
Pi Display		monitor for pi	1	C	
HDMI to Ethernet cable		for pi 0's possibly	4	C	
Wallops connectors and mounts set		connect to rocket power ****	1	C	stored in case
D-subs + standoffs			27	C	some sets some not
USB-C breakout			5	C	
USB-A + cover			3	C	1 usba, 2 covers
Micro USB		power/ info	3	C	
26 gage electrical wire spool		electrical running	9	C	may be 28 g? is this thick enough for our power?
12 V gear box motor 100 rpm		possible replacement?	1	C	needs testing- possible replacement bc higher rpm
Soldering Bread Boards		custom solder boards	9	C	various sizes
Distance sensor			2	C	
thermal sensor		non-contact	3	C	
motor couplers		for linear acuator	6	C	
Heat sinks		for rasberry pi	10	C	
HDMI f to mini HDMI m		hookup to pi 4's	1	C	
Limit Switches		tell us when arm is extended and in home position	3	C	may go with better design- flimsy
on/off switch		control power/signal	1	C	may need for dissabling during wallops testing
Breadboards		testing circuits	4	C	
lead wires		testing circuits	N/A	C	plenty we have
pi zeros + kit		for pi cam (secondary)	3	C	stored with cams (2 kits and 1 wrapped)
cam ribbon connectors		for pi cam (secondary)	5	C	stored with cams
MCP		for pi cam (secondary) circuit	2		stored with pi cams
Accelerometers		measure acceleration	2	C	may be for extra data
Tememetry transceiver		send data to rocket	1	C	may not need?
Micro SD Adapter		for cam sav data extraction	4	C	
Buck Converters		power regulation	8	C	
pi 4 wall charger/ power			1	C	
Madventure 360 cam set		Our main camera + accesories	3	C	2 spares all working
Large power supply		testing circuits/ system integration	1	C	belongs to space grant RR
High Torque Gear Motor, 12v, 10 rpm		backup motor for linear actuator	1	C	probably will not use but if we need higher torque will be good- but slower

Electrical | Mechanical | Custom Parts | Hardware

- Comprehensive Inventory
- Current Components
- Ordering
- Prototyping
- Connecting with local machinist

Mechanical: Updates & Improvements

- Design improvements on movement of camera arm
- Integrity of joints
- Mounting integrity
- Structural integrity enhancements
- Height requirement design corrections

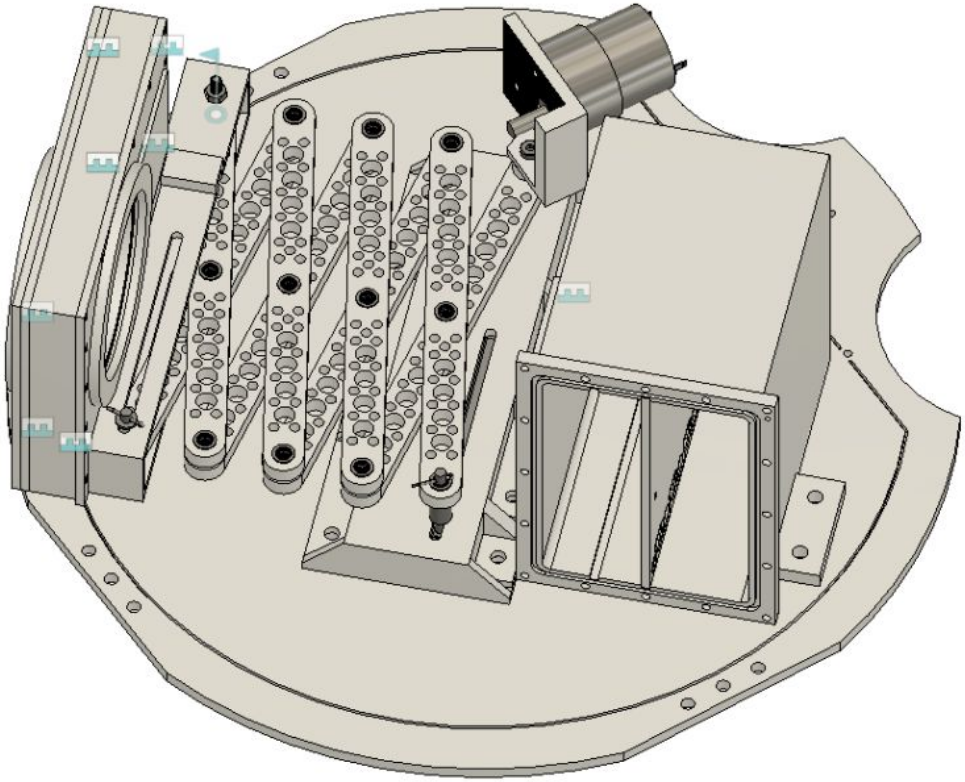

- Spacing corrections and tolerances on Arm
- Hardware selection for joints and movement
- Position optimization for Ebox to power supply

Mechanical: Custom Parts & Updated Hardware

Scissor Arm Joints

- Flange bearings, bolt & nut combo for rigidity without loss of movement

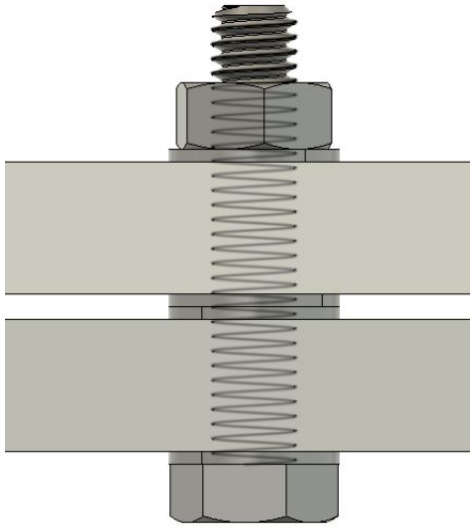

Camera Side Arm Mount Joints

- Custom spacers
- Custom cotter pin for slide freedom
- Flange bearings added

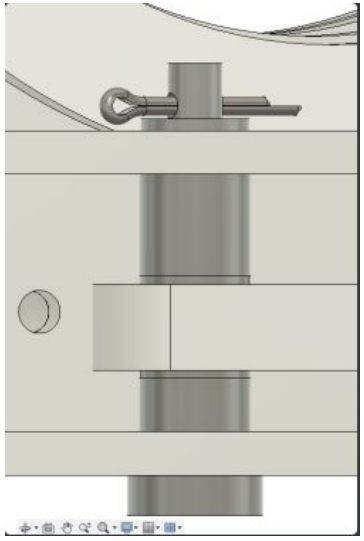

left side

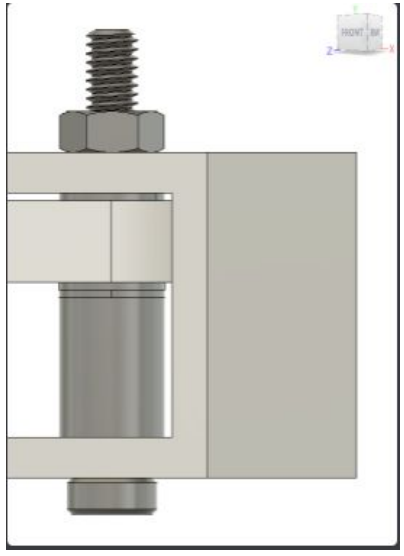

right side

Mechanical: Custom Parts & Updated Hardware

Base Mount bearing track

- More weight support
- Smoother, more controlled movement

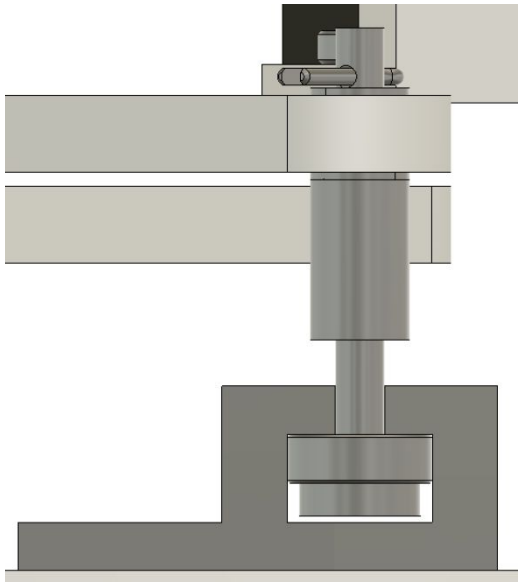

- New bearing track concept has been tested

Motor Mount Joint

- Thicker walls
- Spacer integration with base mount
- Flange bearings added

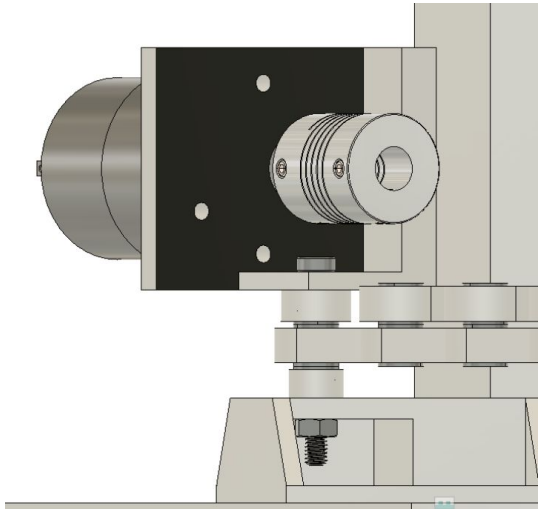

- New mount has been fit-tested to motor

Mechanical:

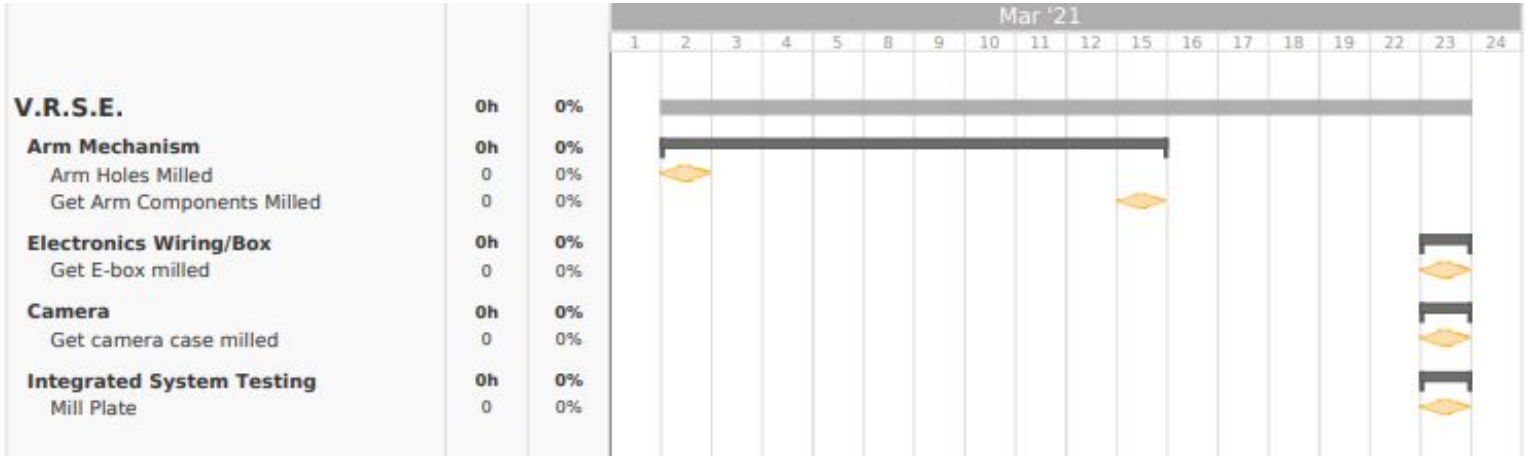

Machining in 3 Phases:

1. Holes in milled members
2. Scissor Arm System
3. Camera case/Electronics Box/Plate

Electrical Updates

Stacie Barbarick

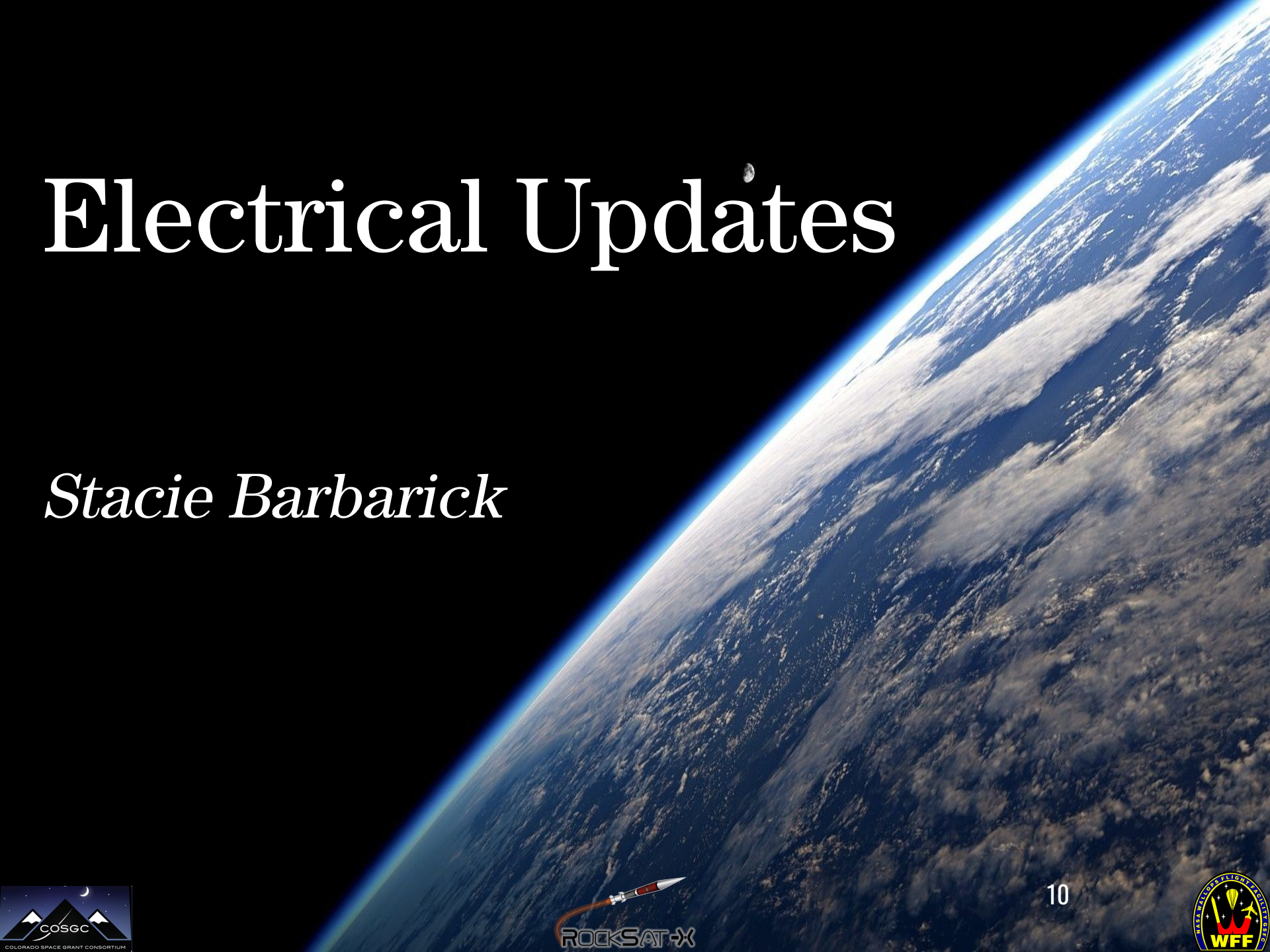

Electrical

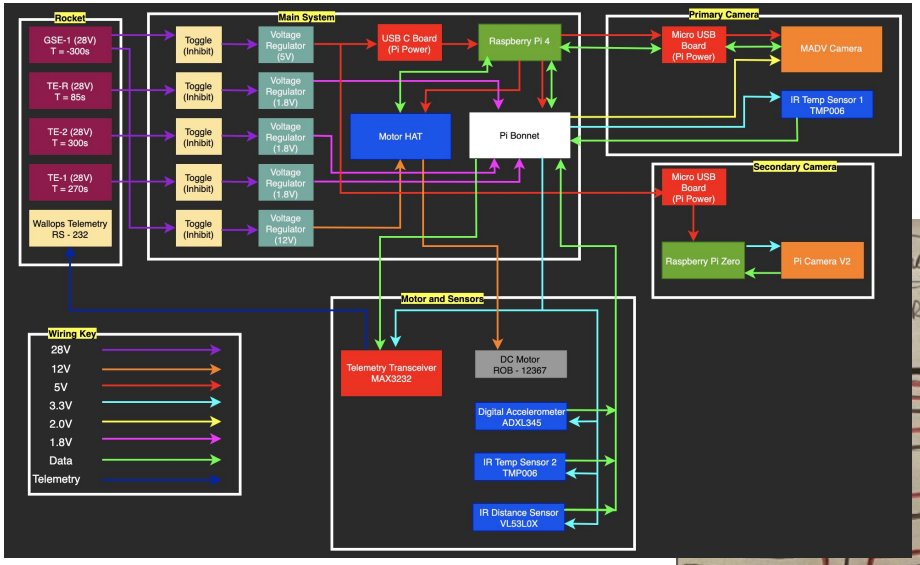

Rocket
GSE-1 (28V) T = -300s
TE-R (28V) T = 85s
TE-2 (28V) T = 300s
TE-1 (28V) T = 270s
Wallops Telemetry RS - 232
Main System
Toggle (Inhibit)
Voltage Regulator (5V)
Voltage Regulator (1.8V)
Voltage Regulator (12V)
USB C Board (Pi Power)
Raspberry Pi 4
Motor HAT
Pi Bonnet
Primary Camera
Micro USB Board (Pi Power)
MADV Camera
IR Temp Sensor 1 TMP006
Secondary Camera
Micro USB Board (Pi Power)
Raspberry Pi Zero
Pi Camera V2
Motor and Sensors
Telemetry Transceiver MAX3232
DC Motor ROB - 12367
Digital Accelerometer ADXL345
IR Temp Sensor 2 TMP006
IR Distance Sensor VL53L0X
Wiring Key
28V
12V
5V
3.3V
2.0V
1.8V
Data
Telemetry

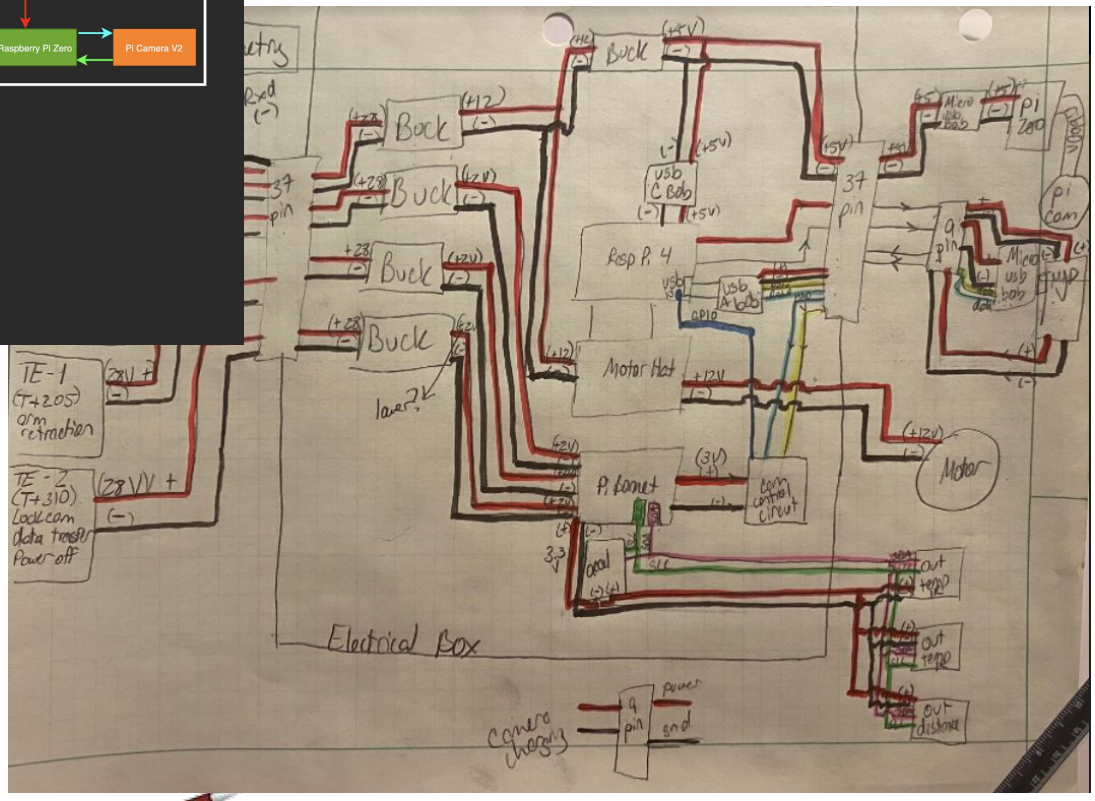

Buck
Buck
Buck
Buck
Buck
37 pin
Resp Pi 4
Motor Hat
Pi Bonnet
Motor
Electrical Box
TE-1 (T+205) arm retraction
TE-2 (T+310) Lock cam data transfer Power off

Electrical

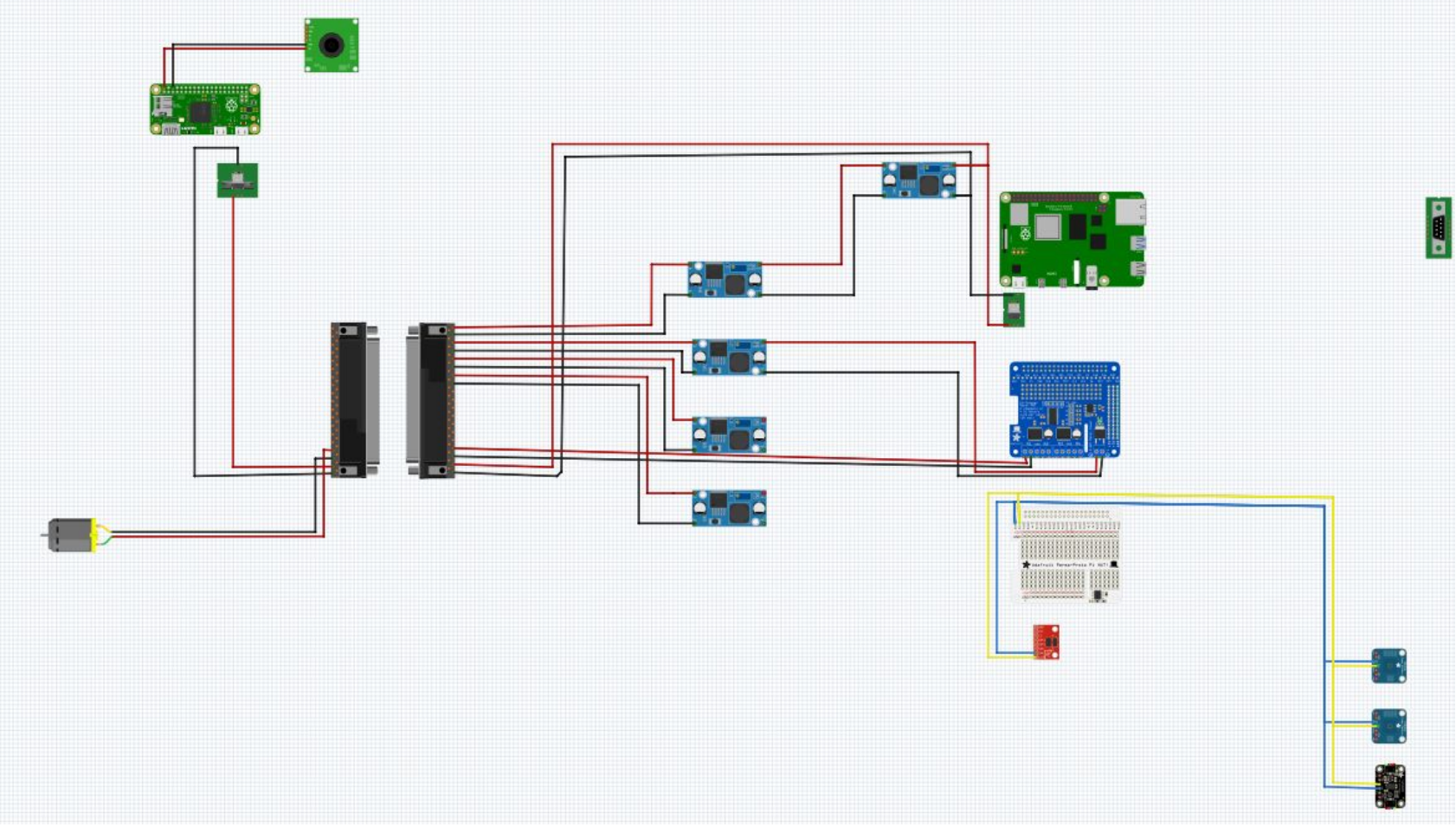

Electrical

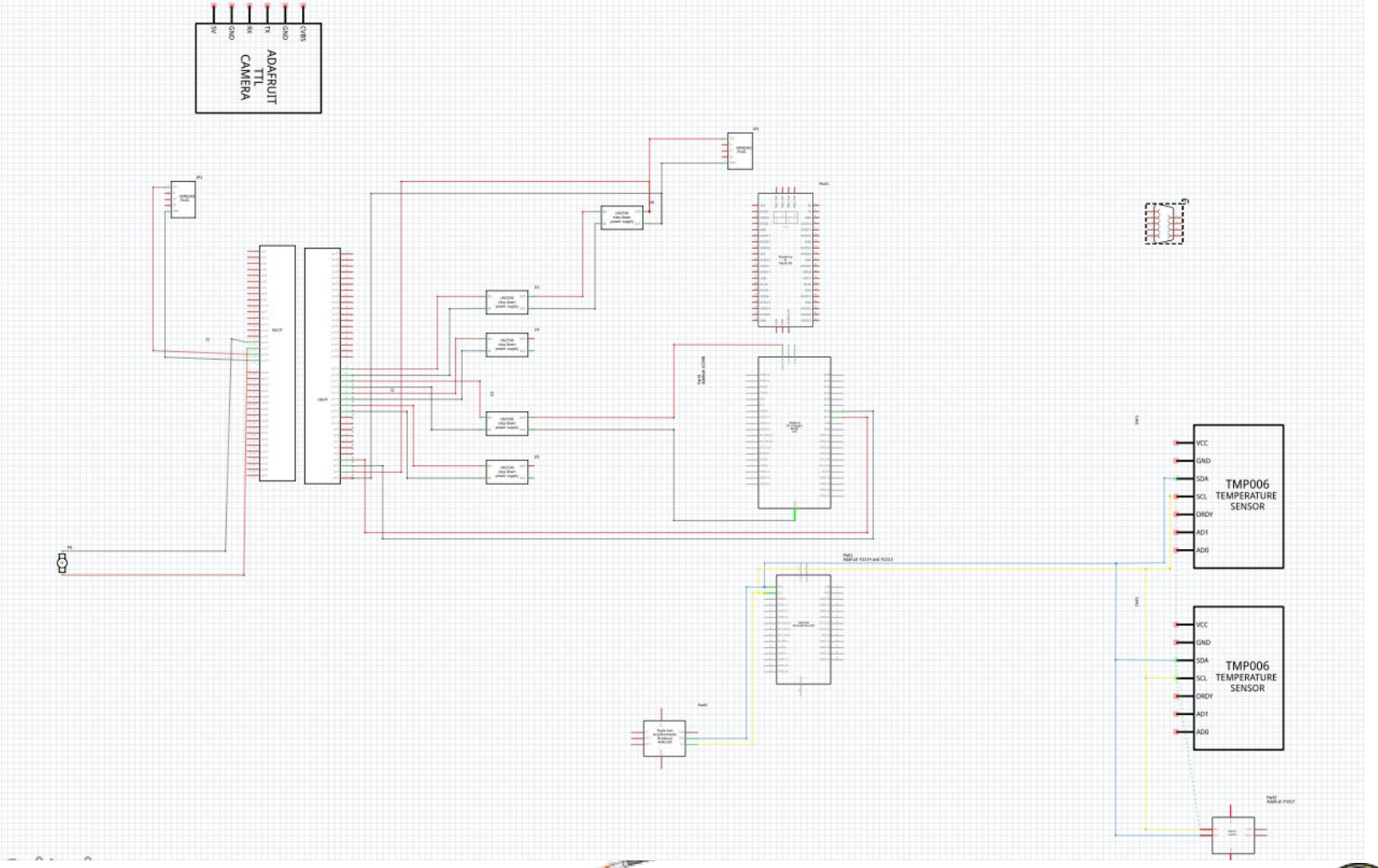
ADAFRUIT TTL CAMERA
TMP006 TEMPERATURE SENSOR
TMP006 TEMPERATURE SENSOR

Programming

Andrew Bruckbauer

Programming:

```
#!/bin/bash
# Installer 2.0
cd /home/pi
mkdir videos
mkdir data
mkdir /mnt/usb-drive
apt-get update
apt-get upgrade -y
apt-get install python3-pip
pip3 install --upgrade setuptools
apt-get install -y python3 git python3-pip
#Set Python 3 to default
sudo update-alternatives --install /usr/bin/python python $(which python2) 1
sudo update-alternatives --install /usr/bin/python python $(which python3) 2
#i2c Tools
apt-get install python3-dev python3-pip python3-smbus i2c-tools -y
apt-get install libusb-1.0-0-dev -y
# update-alternatives --config python
pip3 install RPI.GPIO
pip3 install adafruit-blinka
# Install TMP006
apt-get install build-essential python-dev python-pip python-smbus git
pip install RPi.GPIO
git clone https://github.com/adafruit/Adafruit_Python_TMP.git
sleep 2
cd Adafruit_Python_TMP
python setup.py install
cd /home/pi
# Install VL503L0X Library
pip3 install adafruit-circuitpython-vl5310x
# Install ADXL345
pip3 install adafruit-circuitpython-ADXL34x
# Install motorkit
pip3 install adafruit-circuitpython-motorkit
# Install picamera
pip3 install picamera
# Install psutil
pip3 install psutil
# Install uhubctl
git clone https://github.com/mvp/uhubctl
sleep 2
cd uhubctl
make
make install
cd /home/pi
mv RockSat2020_Bruckbauer/camera_scripts /home/pi
echo "Installed"
sleep 1
echo "Remember to enable serial, i2c, spi, and pi-camera"
echo "Run sudo raspi-config to enable these options"

```

GPIO_Control.py

Programming:

Install.sh

GPIO_control.py

C: > Users > Andre > OneDrive > Desktop > Rocksat > GPIO_control.py > ...

```
import RPi.GPIO as GPIO
import board
import subprocess
from adafruit_motorkit import MotorKit
GPIO.setmode(GPIO.BCM)

kit = MotorKit(i2c=board.I2C())
button1=18
#Event 1
button2=27
#Event 2
button3=22
#Event 3
limit_1=23
#Arm closed switch
limit_2=24
#Arm open switch

GPIO.setup(button1,GPIO.IN,pull_up_down=GPIO.PUD_UP)
GPIO.setup(button2,GPIO.IN,pull_up_down=GPIO.PUD_UP)
GPIO.setup(button3,GPIO.IN,pull_up_down=GPIO.PUD_UP)
GPIO.setup(limit_1,GPIO.IN,pull_up_down=GPIO.PUD_UP)
GPIO.setup(limit_2,GPIO.IN,pull_up_down=GPIO.PUD_UP)
print ("Program Started press buttons to simulate events")
while (1):
    if GPIO.input(button1)==0:
                    print ("Button 1 Pressed")
                    print ("Arm Extension")
                    sleep (.1)
                    if GPIO.input(limit_2)==1:
                        kit.motor3.throttle = 1
                        sleep (1)
                        while kit.motor3.throttle == 1:
                            if GPIO.input(limit_2)==0:
                                print ('in IF Statement')
                                kit.motor3.throttle = 0
                                print ("Starting Camera Script RECORD")
                                sleep (.5)
                                subprocess.call("./camera_scripts/camera_control_on.sh",
                                print ("other scripts")
                                #call other script
                            elif kit.motor3.throttle == 0:
                                break
    if  GPIO.input(button2)==0:
                print ("Button 2 Pressed")
                print ("Arm Retraction")
                #kit.motor3.throttle = -1
                if GPIO.input(limit_1)==1:
                    kit.motor3.throttle = -1
```

Schedule

Stacie Barbarick

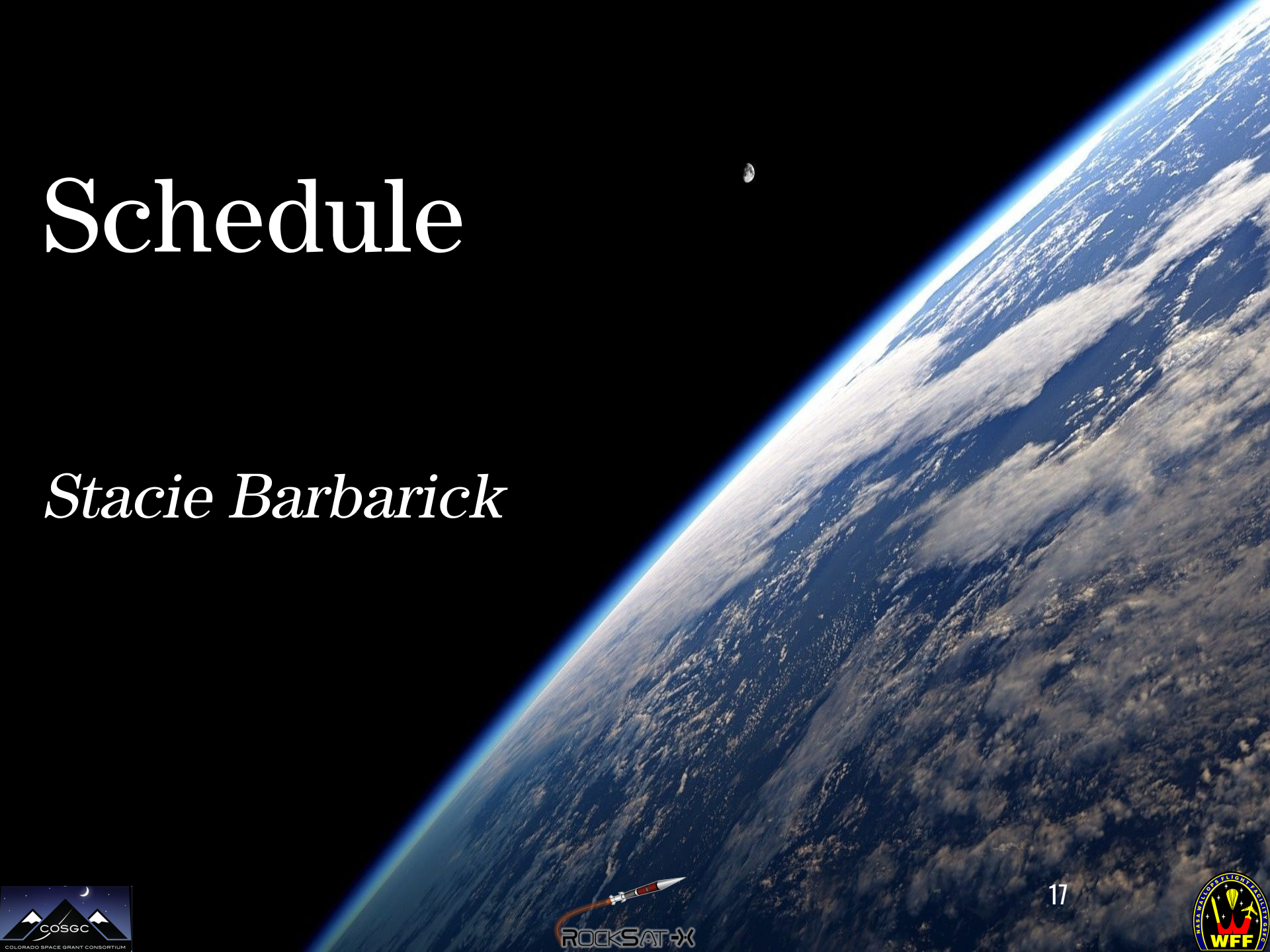

Schedule:

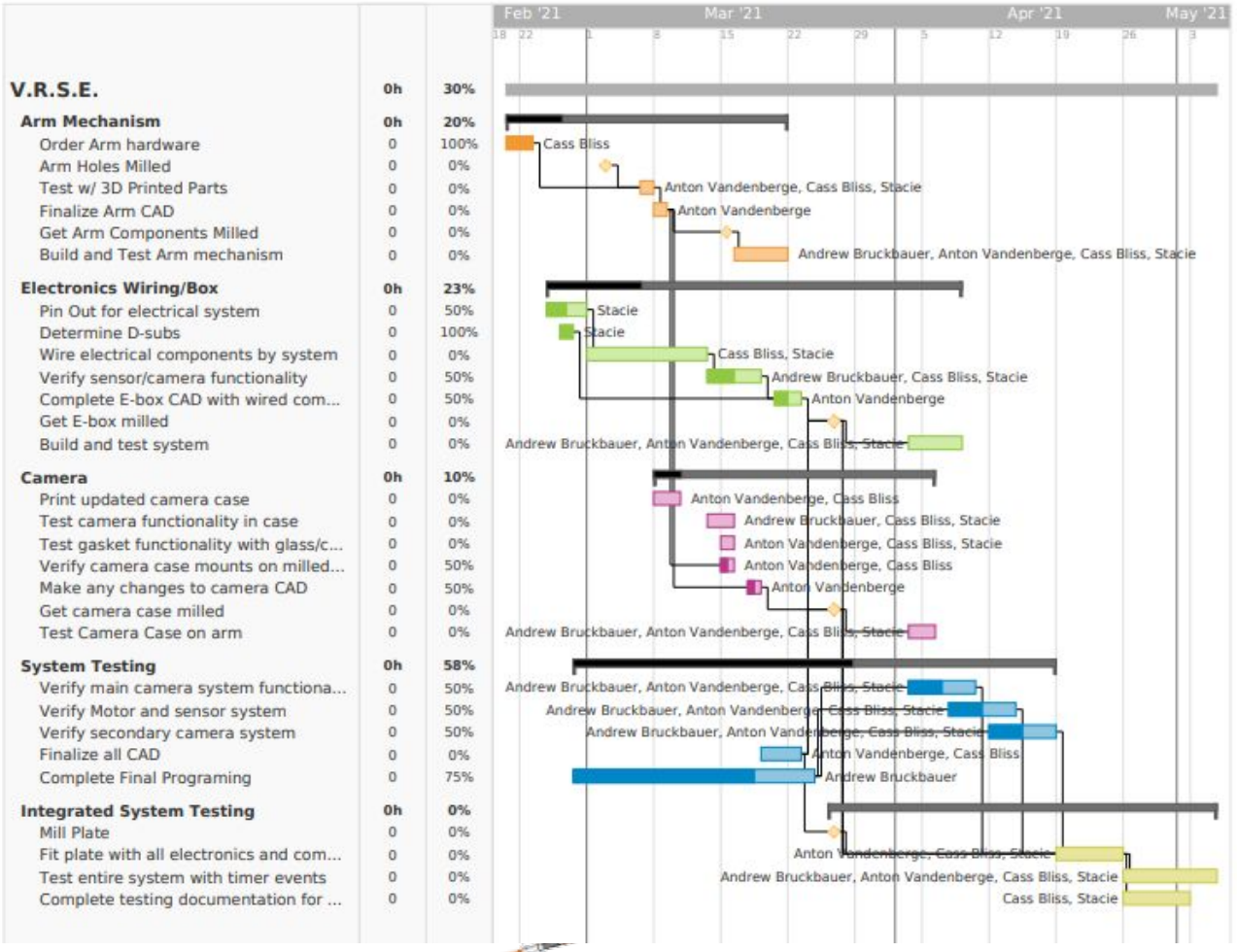
Feb '21
Mar '21
Apr '21
May '21
18 22 1 8 15 22 29 5 12 19 26 3
V.R.S.E. 0h 30%
Arm Mechanism 0h 20%
Order Arm hardware 0 100% Cass Bliss
Arm Holes Milled 0 0%
Test w/ 3D Printed Parts 0 0% Anton Vandenberge, Cass Bliss, Stacie
Finalize Arm CAD 0 0% Anton Vandenberge
Get Arm Components Milled 0 0%
Build and Test Arm mechanism 0 0% Andrew Bruckbauer, Anton Vandenberge, Cass Bliss, Stacie
Electronics Wiring/Box 0h 23%
Pin Out for electrical system 0 50% Stacie
Determine D-subs 0 100% Stacie
Wire electrical components by system 0 0% Cass Bliss, Stacie
Verify sensor/camera functionality 0 50% Andrew Bruckbauer, Cass Bliss, Stacie
Complete E-box CAD with wired com... 0 50% Anton Vandenberge
Get E-box milled 0 0%
Build and test system 0 0% Andrew Bruckbauer, Anton Vandenberge, Cass Bliss, Stacie
Camera 0h 10%
Print updated camera case 0 0% Anton Vandenberge, Cass Bliss
Test camera functionality in case 0 0% Andrew Bruckbauer, Cass Bliss, Stacie
Test gasket functionality with glass/c... 0 0% Anton Vandenberge, Cass Bliss, Stacie
Verify camera case mounts on milled... 0 50% Anton Vandenberge, Cass Bliss
Make any changes to camera CAD 0 50% Anton Vandenberge
Get camera case milled 0 0%
Test Camera Case on arm 0 0% Andrew Bruckbauer, Anton Vandenberge, Cass Bliss, Stacie
System Testing 0h 58%
Verify main camera system functiona... 0 50% Andrew Bruckbauer, Anton Vandenberge, Cass Bliss, Stacie
Verify Motor and sensor system 0 50% Andrew Bruckbauer, Anton Vandenberge, Cass Bliss, Stacie
Verify secondary camera system 0 50% Andrew Bruckbauer, Anton Vandenberge, Cass Bliss, Stacie
Finalize all CAD 0 0% Anton Vandenberge, Cass Bliss
Complete Final Programing 0 75% Andrew Bruckbauer
Integrated System Testing 0h 0%
Mill Plate 0 0%
Fit plate with all electronics and com... 0 0% Anton Vandenberge, Cass Bliss, Stacie
Test entire system with timer events 0 0% Andrew Bruckbauer, Anton Vandenberge, Cass Bliss, Stacie
Complete testing documentation for ... 0 0% Cass Bliss, Stacie

User Guide Compliance

Requirement	*Status/Reason (if needed)*
Center of gravity in 1" plane of plate?	Yes with lb ballast
Weight 30.0+/- 1.0 (15.0 +/- 0.5) lbs?	lbs
Max Height < 10.75” (5.13”)	5.10”
Bottom of deck has flush mount hardware?	It Will
Within Keep-Out Zone	Yes
Using < 10 A/D Lines	Yes
Using/Understand Parallel Line	N/A
Using/Understand Asynchronous Line	N/A
Using X GSE Line(s)	Yes, GSE-1
Using X Non-Redundant PWR Lines (TE-1, TE-2, TE-3)	Yes, TE-1, TE-2
Using X Redundant Power Lines (TE-R)	Yes, TE-R
Using < 1 Ah	Yes
Using <= 28 V	Yes
Using RF (If yes, list frequency and TX Power)	N/A
Using deployable?	Yes, speed is under 1 inch/sec
Whole team consists of US Persons	Yes
Using ITAR and/or Export Controlled hardware	N/A

Concerns:

1. Wire maintenance on the scissor arm
2. Redundancy if there's a power outage/ Raspberry Pi reboot time
3. Amount of time for hardware to come in and test
4. Circuit protection from ships power

Helpful:

Aluminum Prototyping : confirm CAD sooner, actual testing with correct materials etc. Save up to 3 weeks of time.

Bri and Graham as advisors if and when we hit snags

Questions:

Would we be able to use CU-Boulder's machine shop?

Could Chris discuss the need for limit switches with us?